JUNIPER®
THIN Solids Suspension
Local Installation Guide

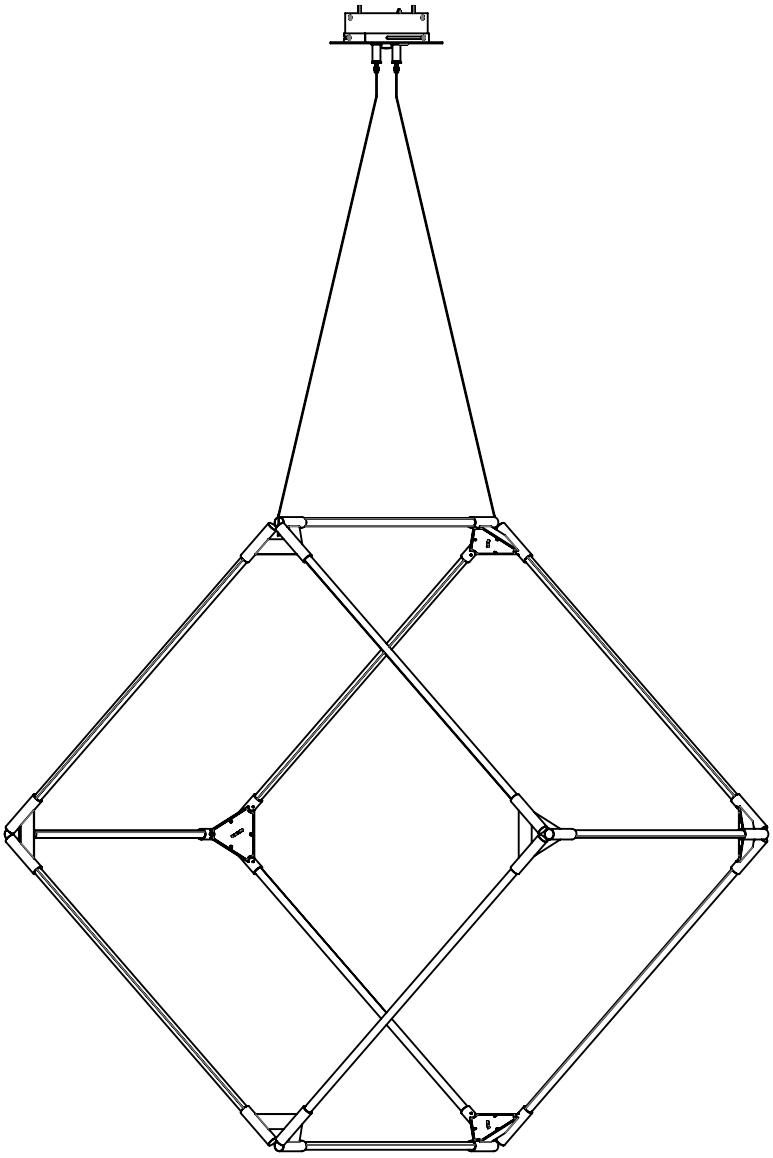

SHOWN ARE EXAMPLES OF CONFIGURATION POSSIBILITIES. SPECIFIC FIXTURE CONFIGURATION MAY VARY.

WARNING

A LICENSED ELECTRICIAN SHOULD PERFORM INSTALLATION.
DISCONNECT MAIN POWER AT THE SOURCE PRIOR TO INSTALLATION.

INSTRUCTIONS MEANT FOR A LOCAL CLASS 2 DRIVER.

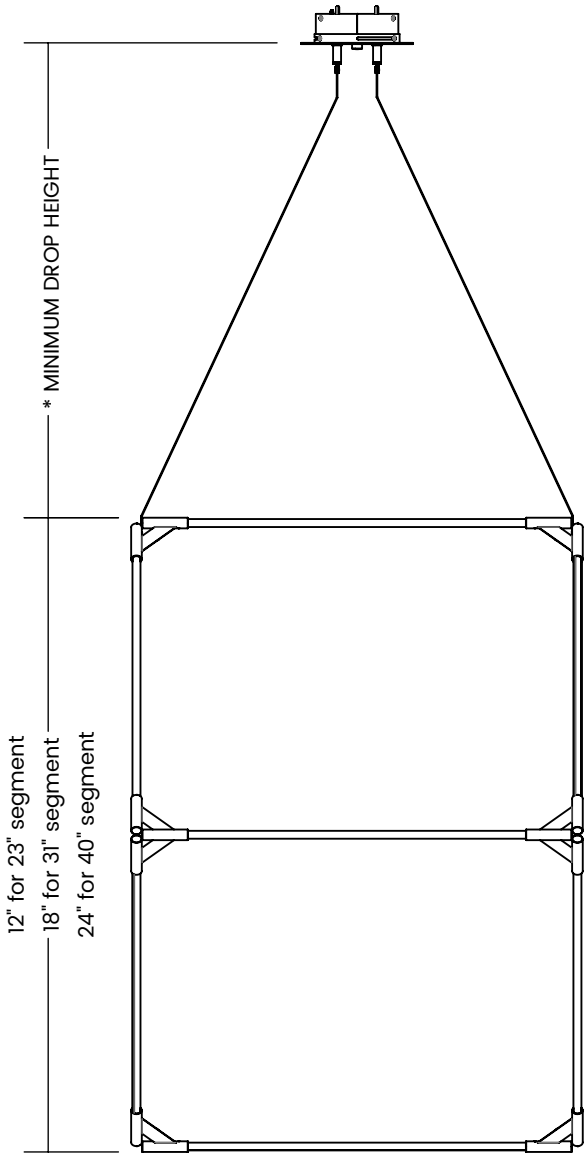

FIGURE 1

*** MINIMUM DROP HEIGHT**

12" Segment : 12" Minimum drop height
18" Segment : 17" Minimum drop height
24" Segment : 22" Minimum drop height

STEP 1: JUNCTION BOX COVER PLATE INSTALLATION INSTRUCTIONS

1

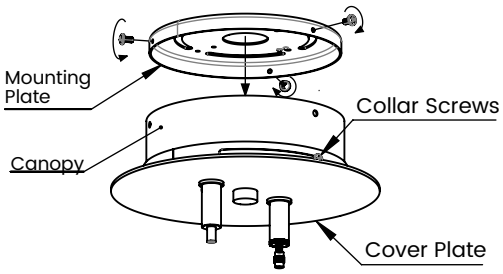

FIGURE 2

Remove screws from the canopy assembly to release the mounting plate.Cover plate can be rotated by loosening the collar screws.

2

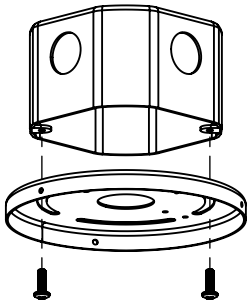

FIGURE 3

Attach the mounting plate to the junction box using provided screws.

3

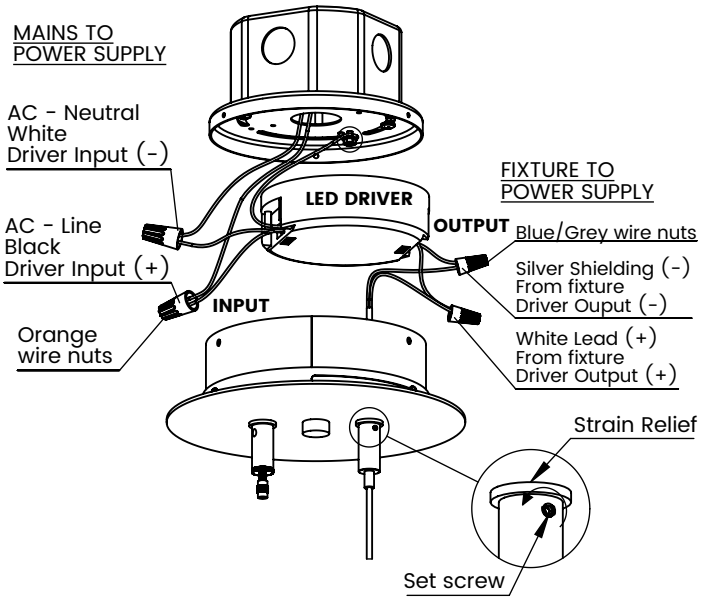

FIGURE 4

Loosen the set screw on the strain relief. Pass power cable, through strain relief as shown. Connect wires according to diagram (wire nuts provided). **AC wires to the driver are not provided.**

4

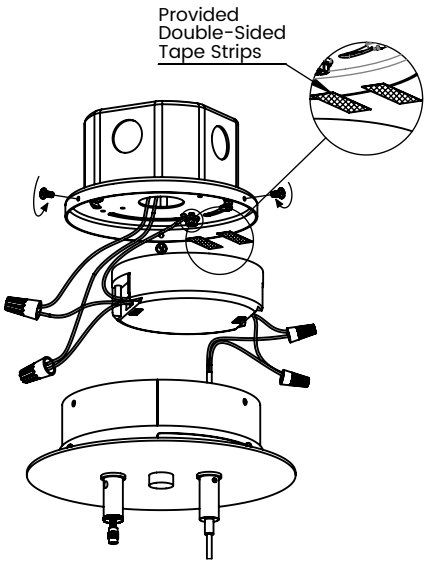

FIGURE 5

A. Attach the LED Driver to mounting plate using provided double-sided tape.
B. Place a wires inside canopy and attach the canopy to mounting plate using screws removed during first instruction.

5

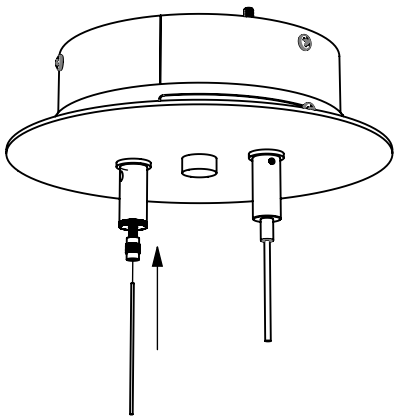

FIGURE 6

Feed aircraft cable through the grippers as shown above.

6

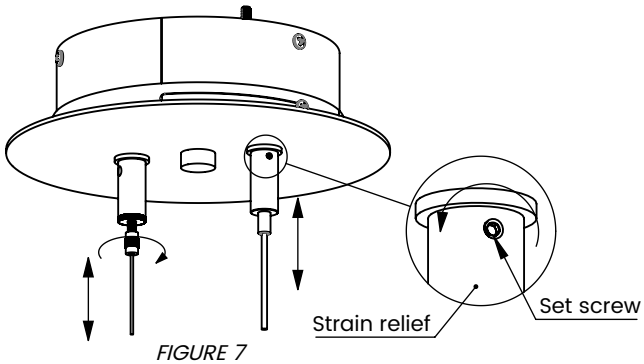

FIGURE 7

Adjust aicraft and power cable length as needed. Press safety nut on gripper to loosen aircraft cable. Tighten safety nut on gripper and set screw on strain relief completely when finished. **Do not cut extra aircraft cable untill full fixture is assembled and desired suspension height is achieved.**

STEP 2: LIGHT TUBE INSTALLATION

1. Loosen the set screw on the connectors as shown
2. Insert the first light tube into the connectors and **tighten the set screws on the connectors** as shown in figure 8.
3. Repeat the above instructions to install light tubes subsequently.

Do not install the lower light tubes without tightening the set screws on the upper light tubes.

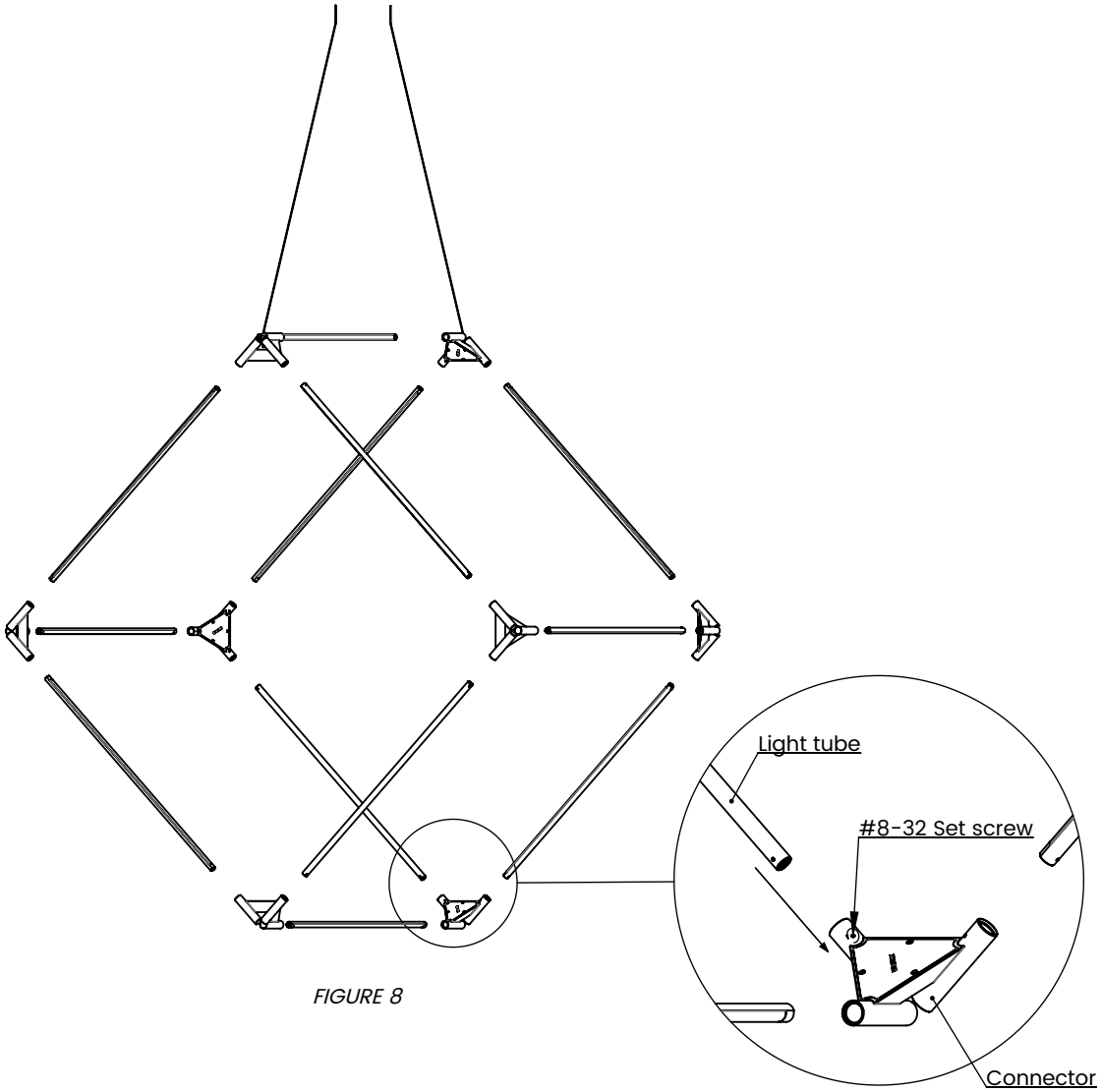

FIGURE 8

STEP 3: ADJUSTING THE LIGHT TUBES

1. Loosen the set screw on the connectors as shown.
   Do not loosen set screws on all connectors simultaneously. Adjust only one light tube at a time.
2. Rotate the light tube to change the direction of the light.
3. Tighten the set screws on the connector.

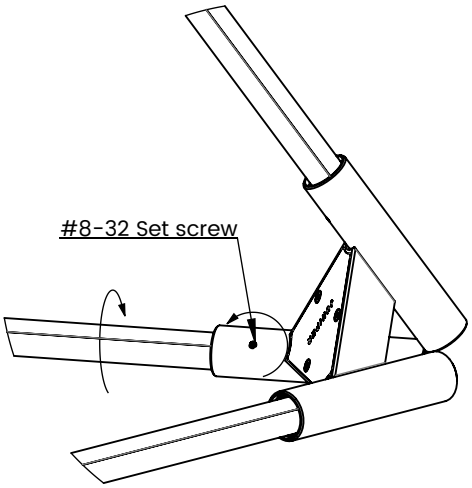

CARE INSTRUCTIONS

Brass will patina over time likeother natural metals and regular care is required in order to retain the quality finish of your THIN fixture for years to come.

Gently wipe with a damp cloth to remove dirt, dust, and fingerprints.

Do not use any chemical cleaning solution.

Use indoors only.